7

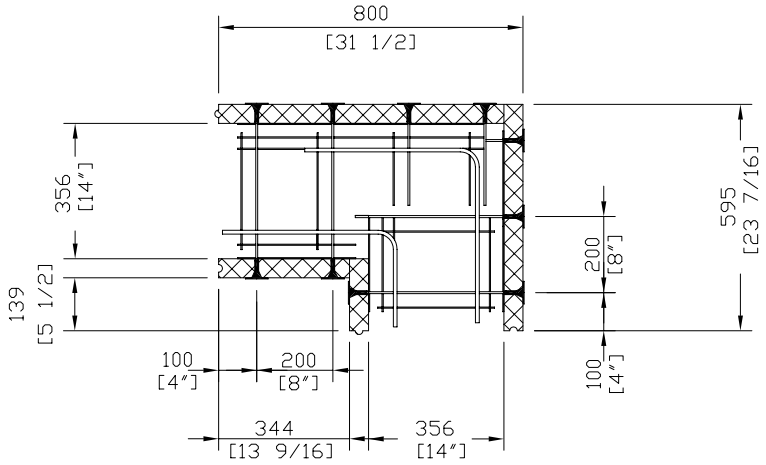

TOP VIEW

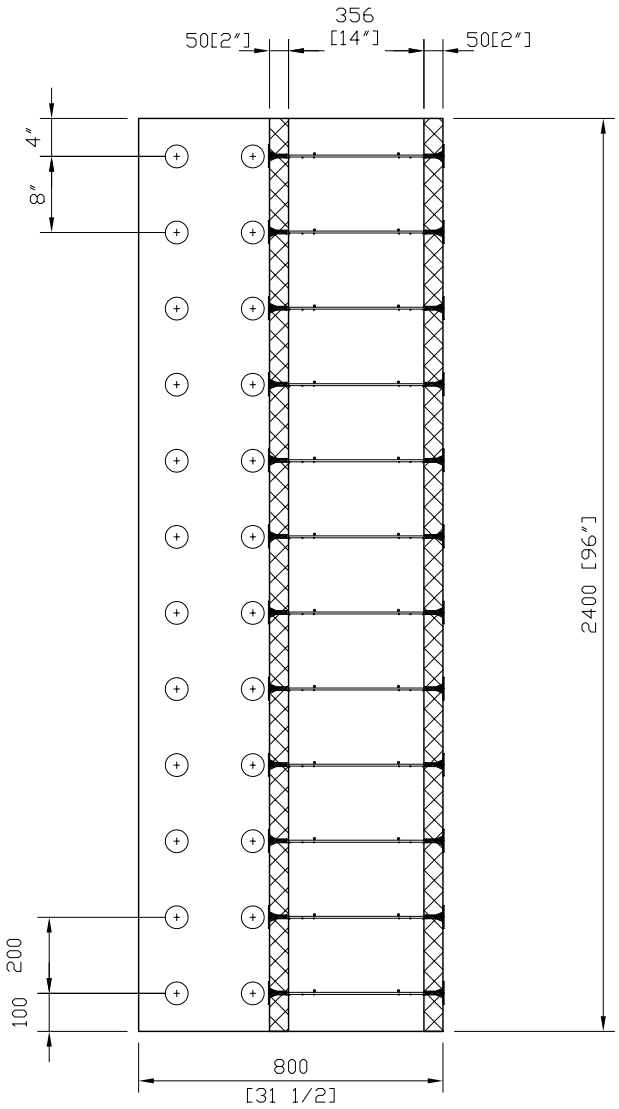

FRONT VIEW

HI-TECH BUILDING SYSTEMS CORPORATION

B-57 Corstate Ave.
Concord, Ontario,
L4K 4Y2, Canada
Tel: (905)738-0567
Fax:(905)738-0628
E-mail:htbs@connection.com

Armopanel™ Wall System

350mm (14") 90° CORNER PANEL

REV. NO.	REV. DATE:	FILE:	DWG NO.
DRAWN BY PR	DATE:	SCALE: 1:20	P-18